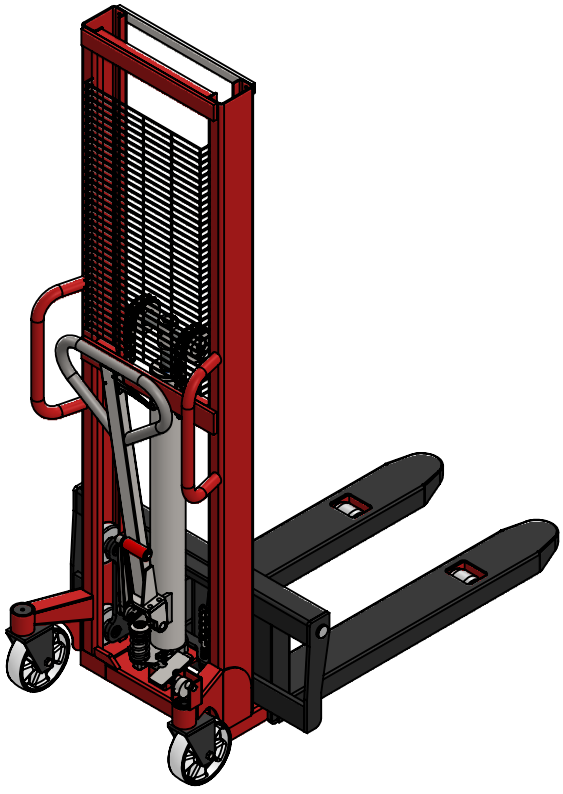

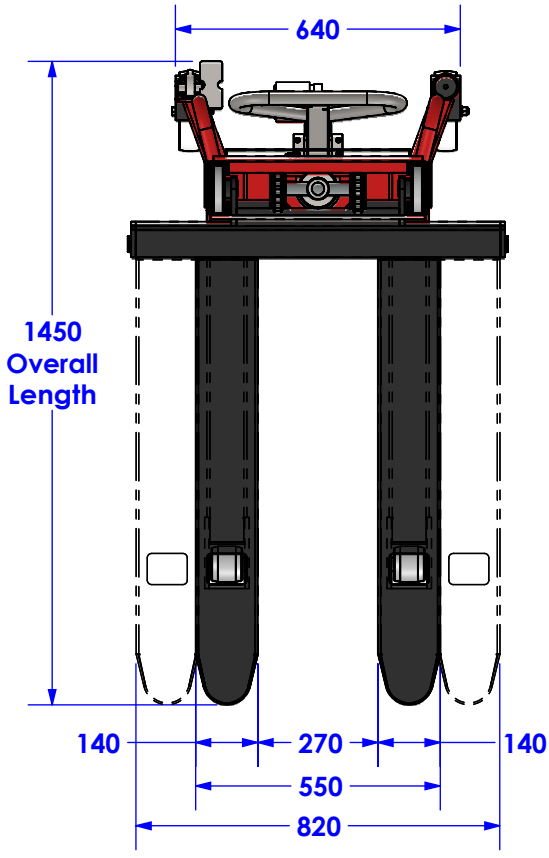

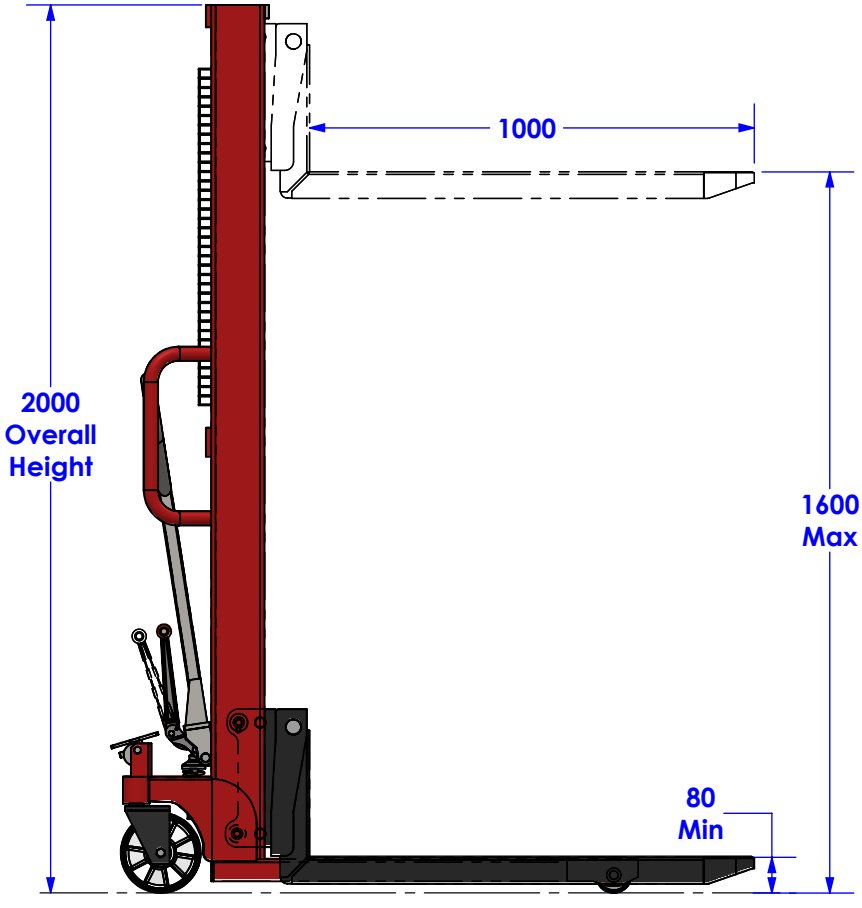

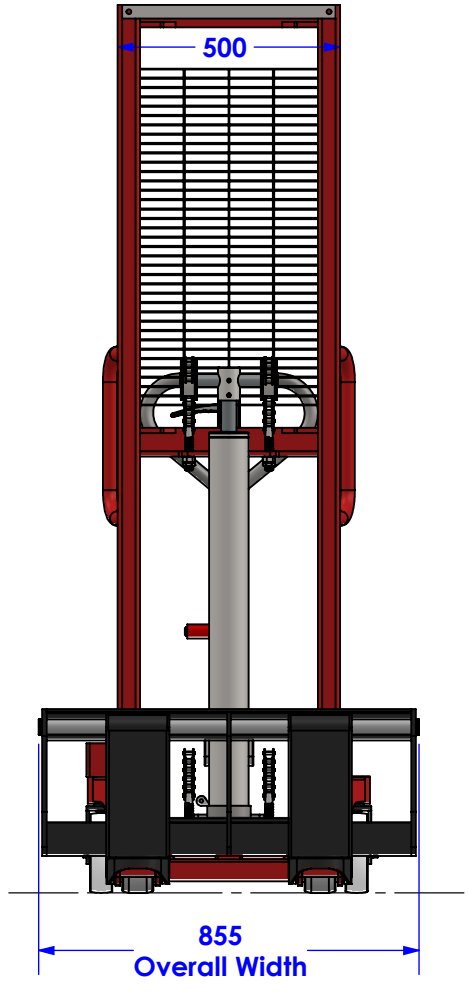

Capacity :- 1000 Kgs./ 1500 Kgs.